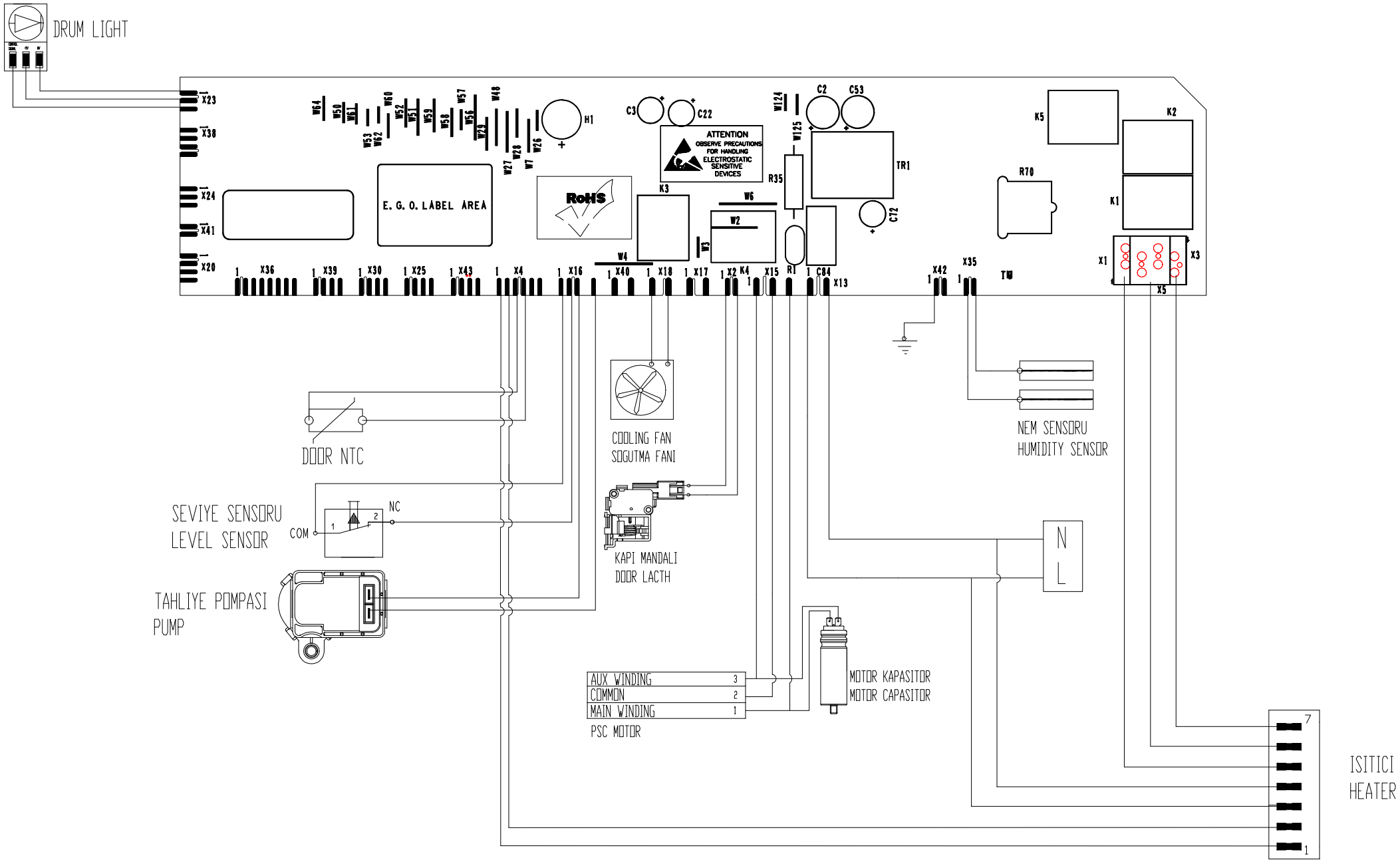# WIRING DIAGRAM