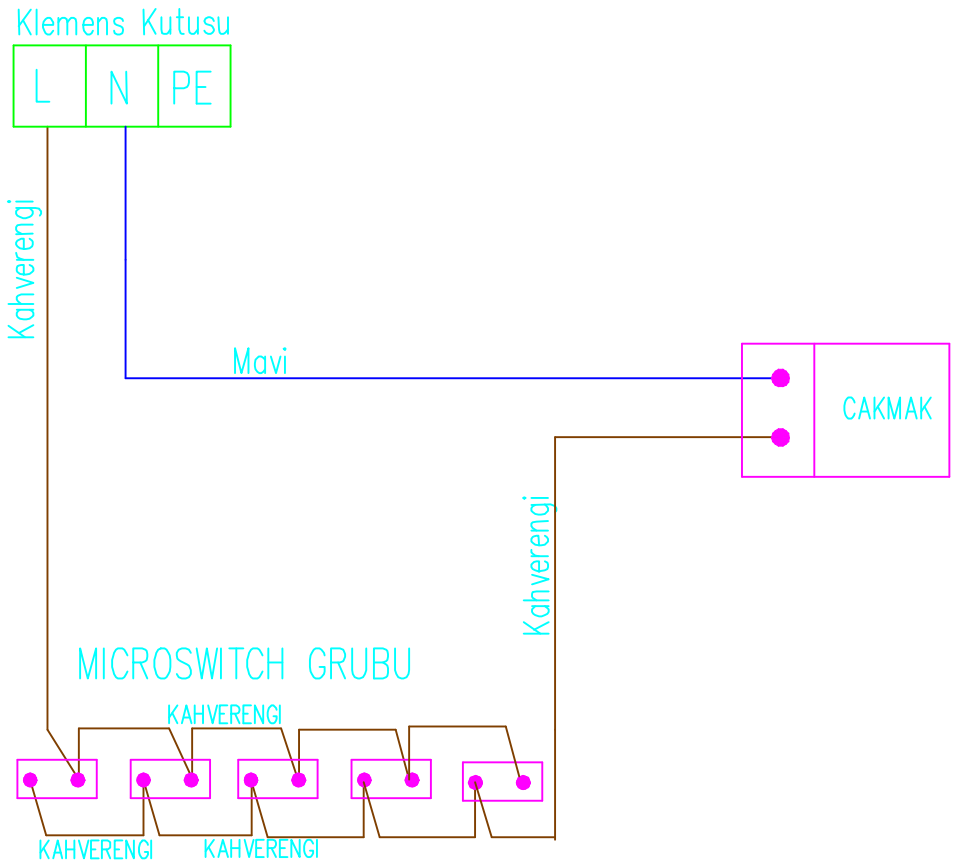

TURKCE	ENGLISH
MAVI	BLUE
SIYAH	BLACK
KIRMIZI	RED
SIYAHBEYAZ	BLACKWHITE
KAHVE	BROWN
BEYAZ	WHITE
MOR	PURPLE
GRI	GREY
PEMBE	PINK
KIRMIZIBEYAZ	REDWHITE
MAVIBEYAZ	BLUEWHITE
KAHVEBEYAZ	BROWNWHITE

Apply the required revisions on other related parts by locating through BOM lists
Herhangi bir degisiklikte, etkilenen diger parcalar Ürün agaclari yolu ile bulunup gereki degisiklikler yapilmalidir

TEN NO	NOTES ACIKLAMALAR	CHANGE NO DEGNO	CHANGE DATE DEGTARIHI	CHANGED BY DEG. YAPAN	CHECKED BY KONTROL EDEN	APPROVED BY ONAYLAYAN

SCALE: ÖLÇEK: DRAWING SCALE			NAME/AD-SOYAD	SIGNATURE/IMZA	DATE/TARIH
GENERAL TOLERANCES GENEL TOLERANSLAR		DRAWN BY CIZEN	E.TUZLU		14.06.2017
		CHECKED BY KONTROL EDEN	M.KILIC		14.06.2017
1-6	±0.1	APPROVED BY ONAYLAYAN	F.ARSLAN		14.06.2017
6-30	±0.2	DRAWING NO: RESIM NO:	FRN_24773		
30-100	±0.3				
100-300	±0.5	PART NAME: PARCA ADI:	GS71_50_51_231 ELK. SEMASI		
300-1000	±0.8				
1000-2000	±1.2	MATERIAL: MALZEME:			
ANGLE/ACI	±15'0"	PART CODE: PARCA KODU:			

VESTEL
BEYAZ ESYA SAN. VE TIC. A.S.
MANISA/TURKIYE

ISSUE NO: YAYIN NO:
ISSUE DATE: YAYIN TARIHI:

SHEET/SAYFA	TOTAL/TOPLAM
1	1

MODEL NAME: MODELLAMA:
DIRECTORY:

ALL RIGHTS RESERVED REPRODUCTION OR ACCESS TO THIS DOCUMENT IS NOT PERMITTED WITHOUT WRITTEN AUTHORITY FROM THE MANUFACTURER.
VESTEL
KEZ HAKKI SAHIBIDIR. BU DOKÜMANIN KOPYALANMASI, ÇOĞALTILMASI, YAYIN YAPILMASI VEYA YETKİLİ KİŞİLERE ÜÇÜNCÜ BİR ŞAHIS TARAFINDAN VERİLMESİ YASAKTIR.